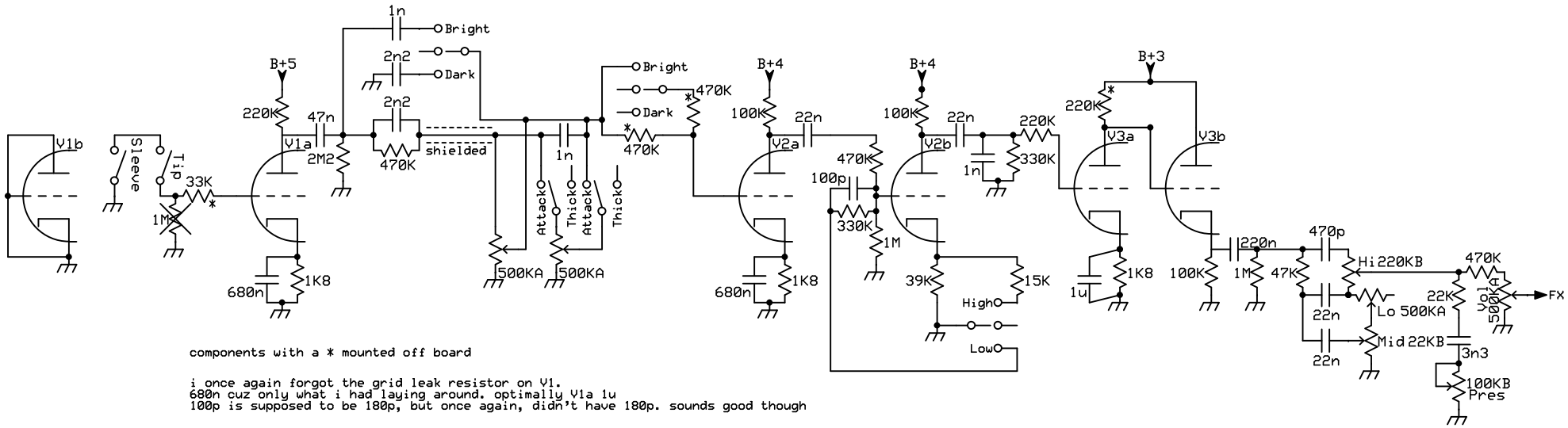

components with a * mounted off board

i once again forgot the grid leak resistor on V1.
680n cuz only what i had laying around. optimally V1a 1u
100p is supposed to be 180p, but once again, didn't have 180p. sounds good though

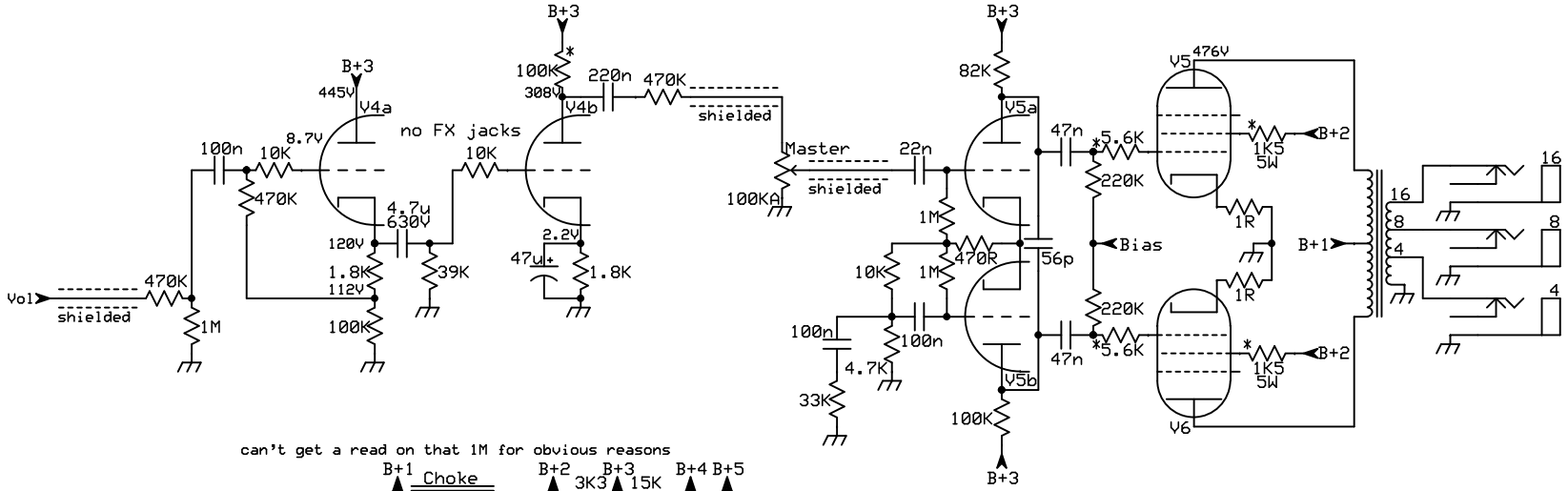

can't get a read on that 1M for obvious reasons

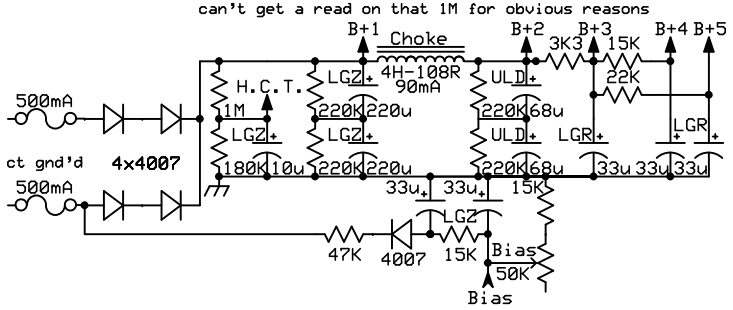

preliminary mods exp2